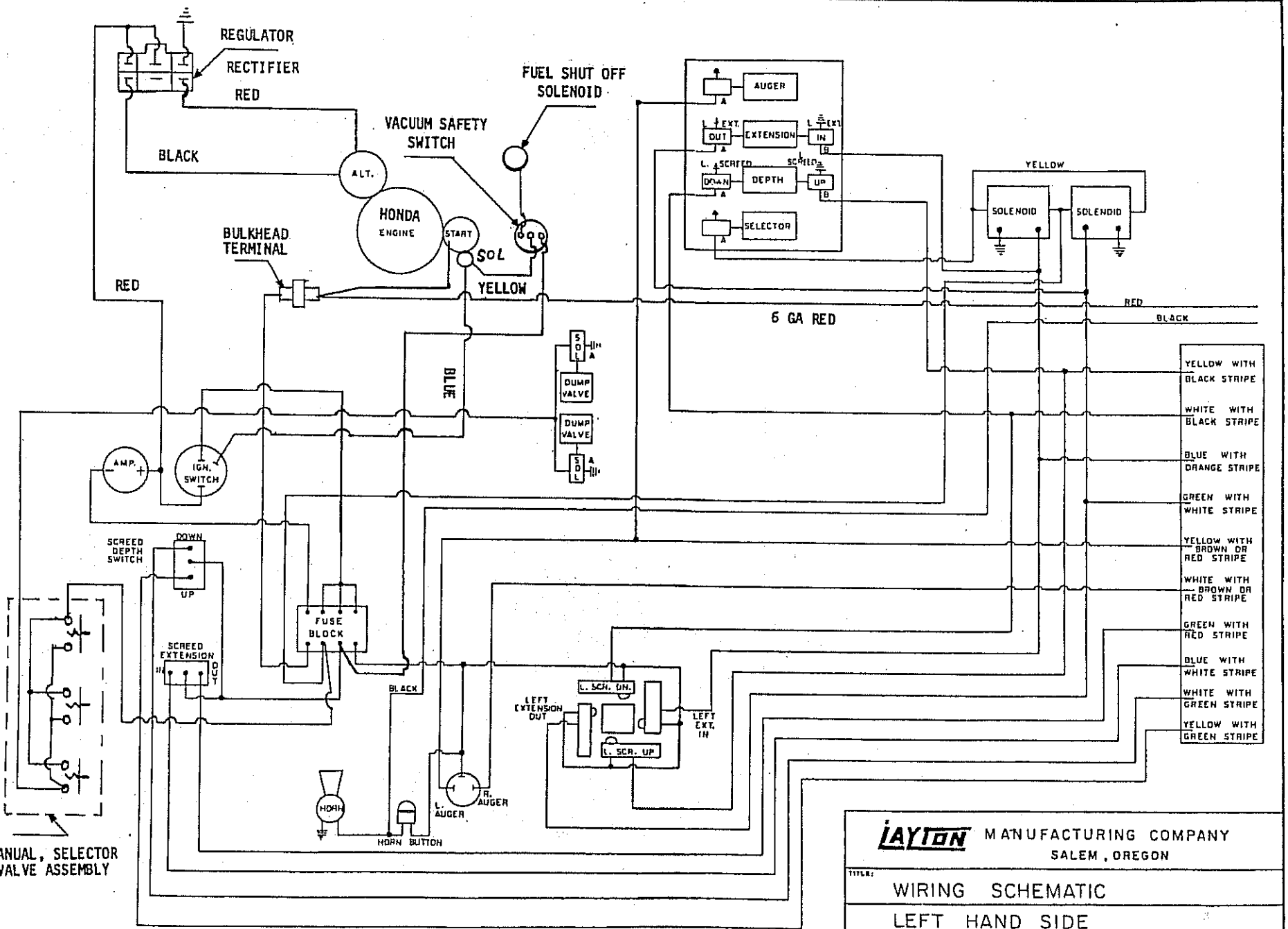

NOTE: THIS WIRING STARTS AT S/N D-9999-K-7

140100-A

LAYTON MANUFACTURING COMPANY
SALEM, OREGON

TITLE: WIRING SCHEMATIC
LEFT HAND SIDE

Ron Phelps		NONE	9-6-87
PAVER D-550			C-285-A

REF. NO.	PART NO.	DESCRIPTION	NO REQ	REF NO	PART NO	DESCRIPTION	NO REQ