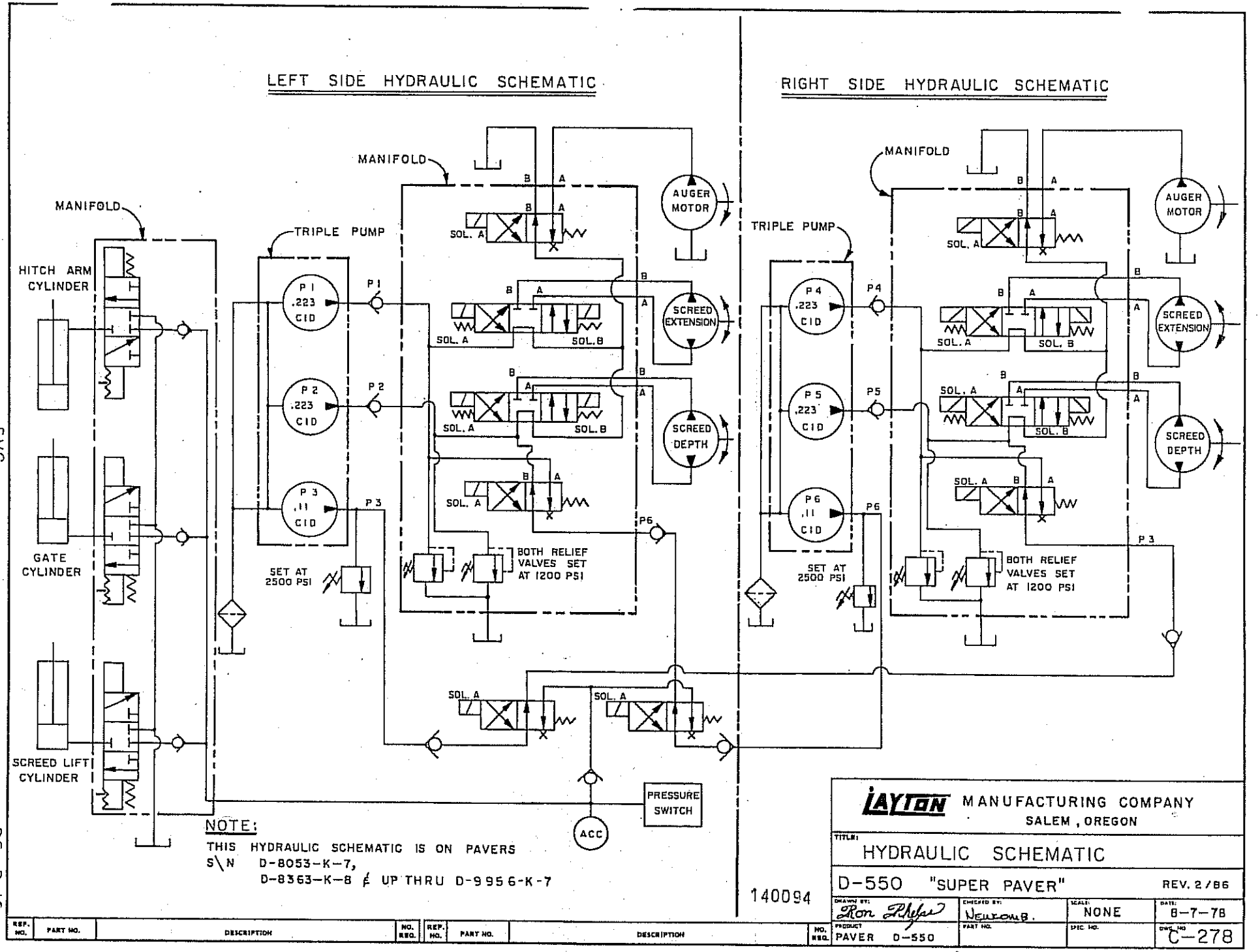
LEFT SIDE HYDRAULIC SCHEMATIC
RIGHT SIDE HYDRAULIC SCHEMATIC
MANIFOLD
HITCH ARM CYLINDER
GATE CYLINDER
SCREED LIFT CYLINDER
TRIPLE PUMP
P1 .223 CID
P2 .223 CID
P3 .11 CID
P4 .223 CID
P5 .223 CID
P6 .11 CID
SET AT 2500 PSI
SOL. A
SOL. B
AUGER MOTOR
SCREED EXTENSION
SCREED DEPTH
BOTH RELIEF VALVES SET AT 1200 PSI
PRESSURE SWITCH
ACC
NOTE:
THIS HYDRAULIC SCHEMATIC IS ON PAVERS
S\N D-8053-K-7,
D-8363-K-8 & UP THRU D-9956-K-7
140094
LAYTON MANUFACTURING COMPANY
SALEM, OREGON
TITLE: HYDRAULIC SCHEMATIC
D-550 "SUPER PAVER"
REV. 2/86
DRAWN BY: Ron Phelps
CHECKED BY: Newcomb.
SCALE: NONE
DATE: 8-7-78
PRODUCT: PAVER D-550
PART NO.
SPEC NO.
DWG. NO. C-278
REF. NO. | PART NO. | DESCRIPTION | NO. REQ. | REF. NO. | PART NO. | DESCRIPTION | NO. REQ.

SVC

FG. D-10